Scale: 2:1

10’x10’

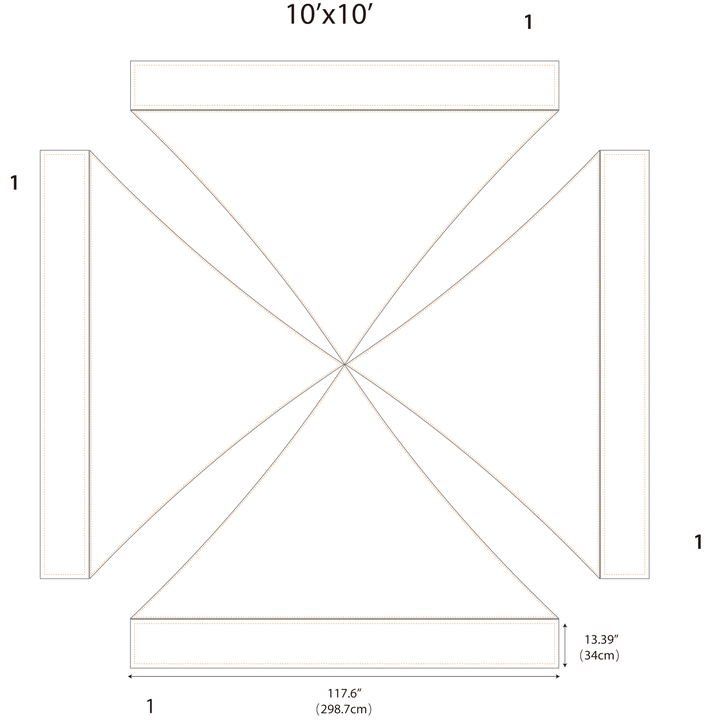

Full wall

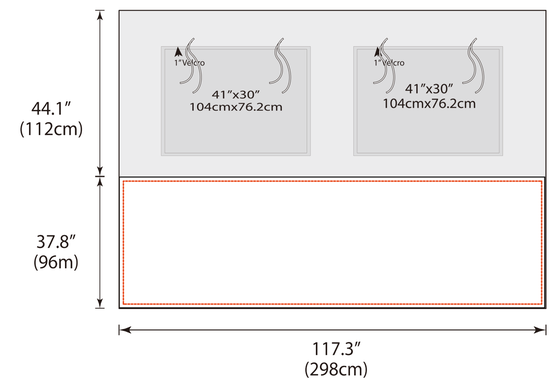

Full wall

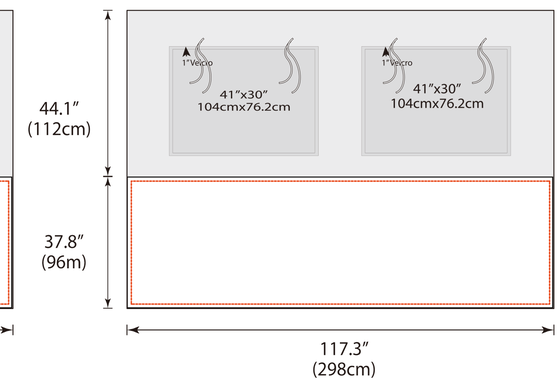

Full wall

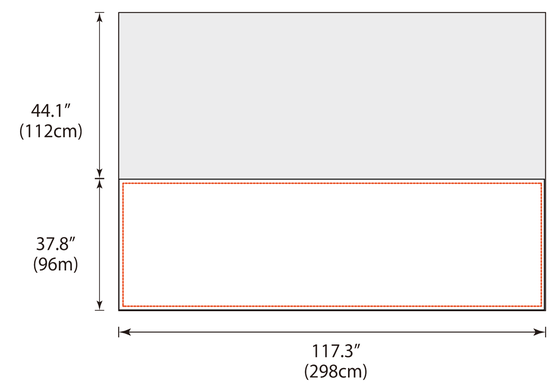

Full wall

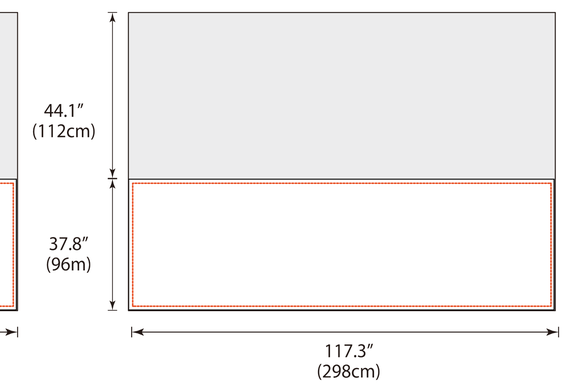

Full wall

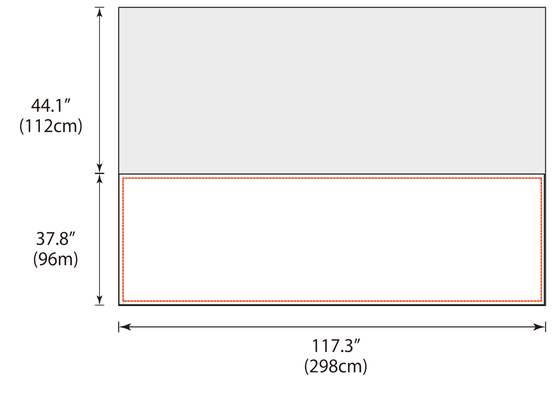

Full wall

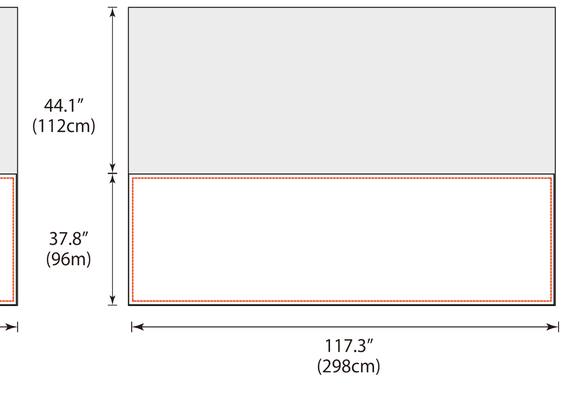

Inside Full back wall

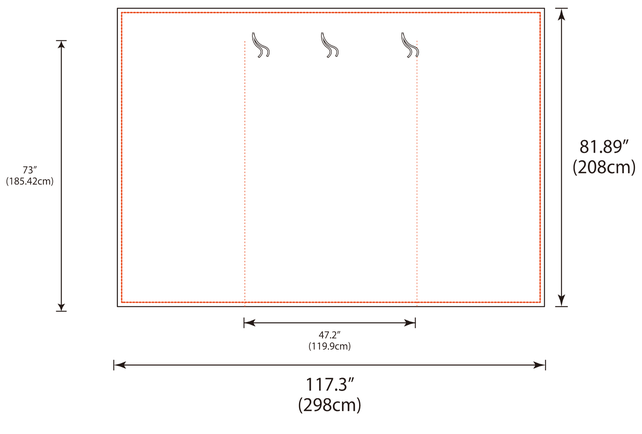
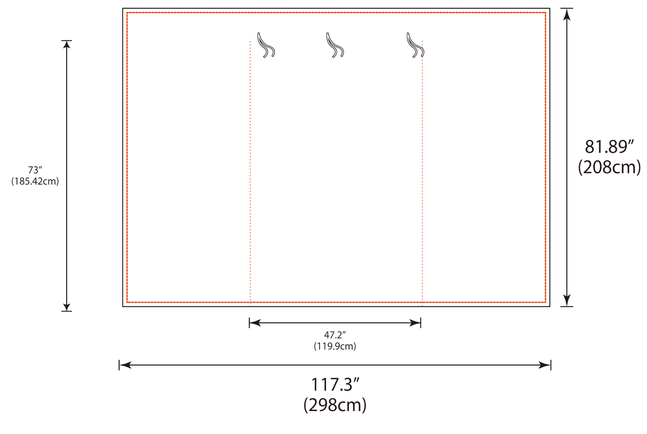
Outside ull back wall