1500mm

Front
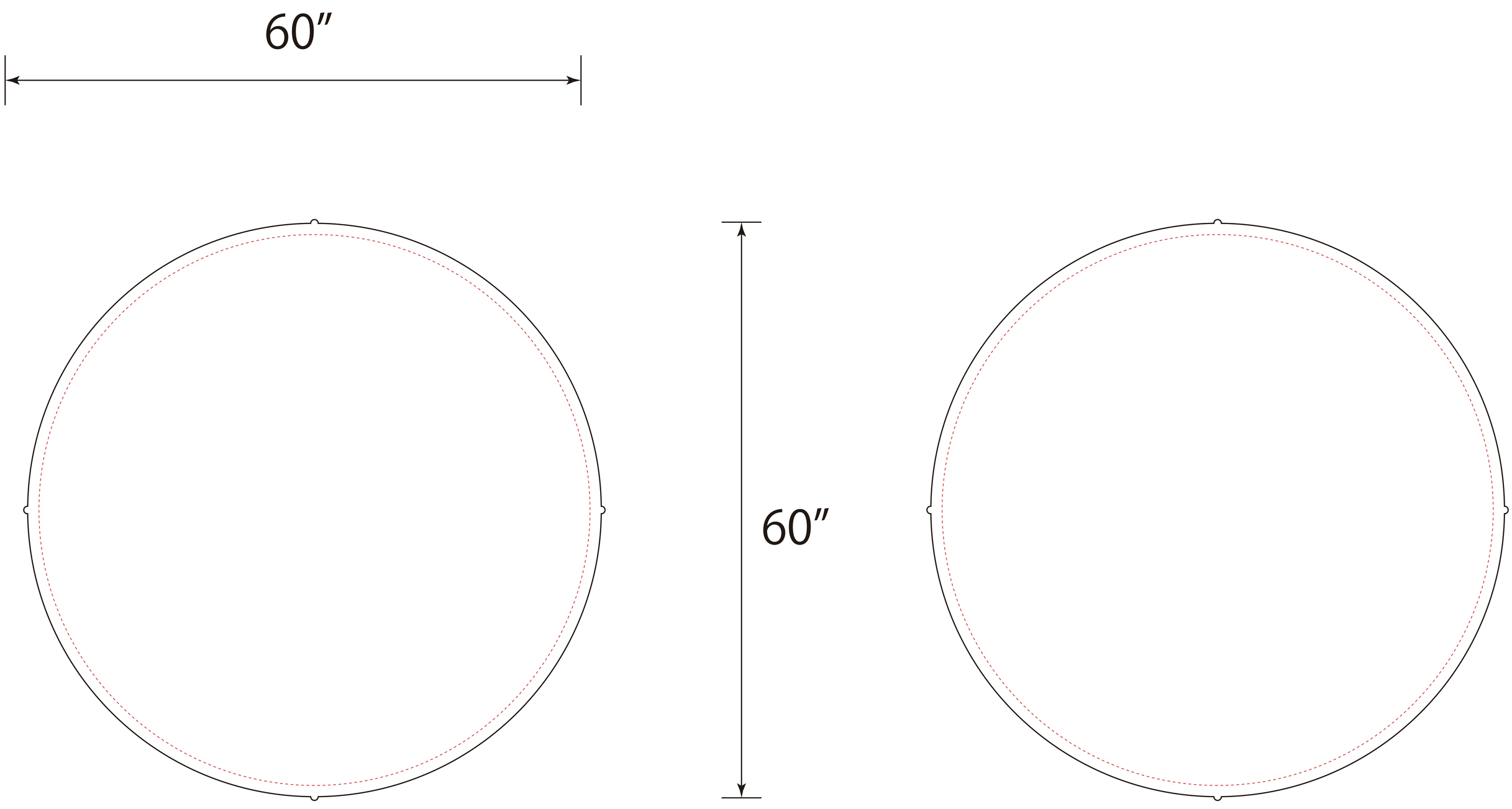
Back