1

10’x10’

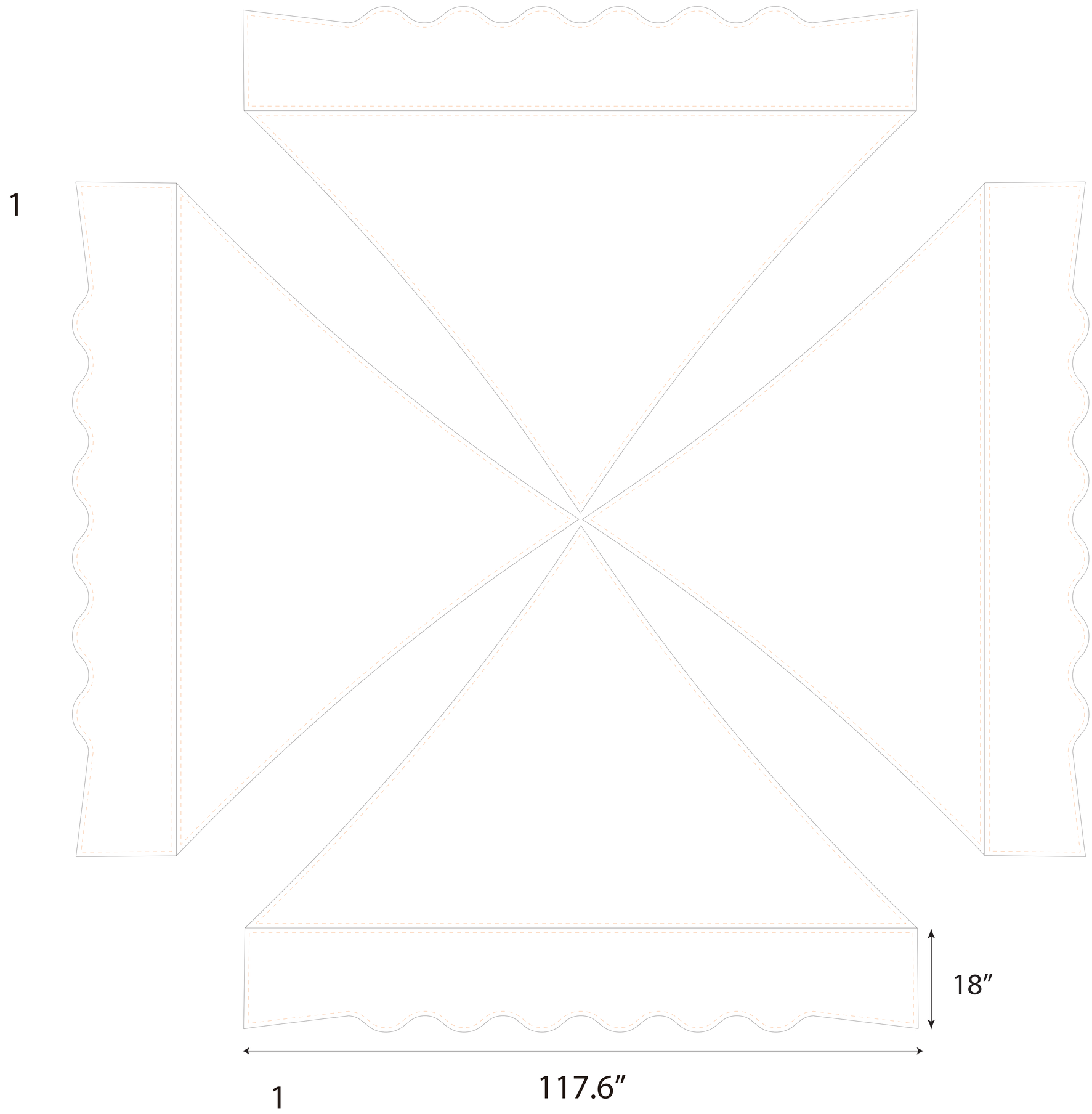
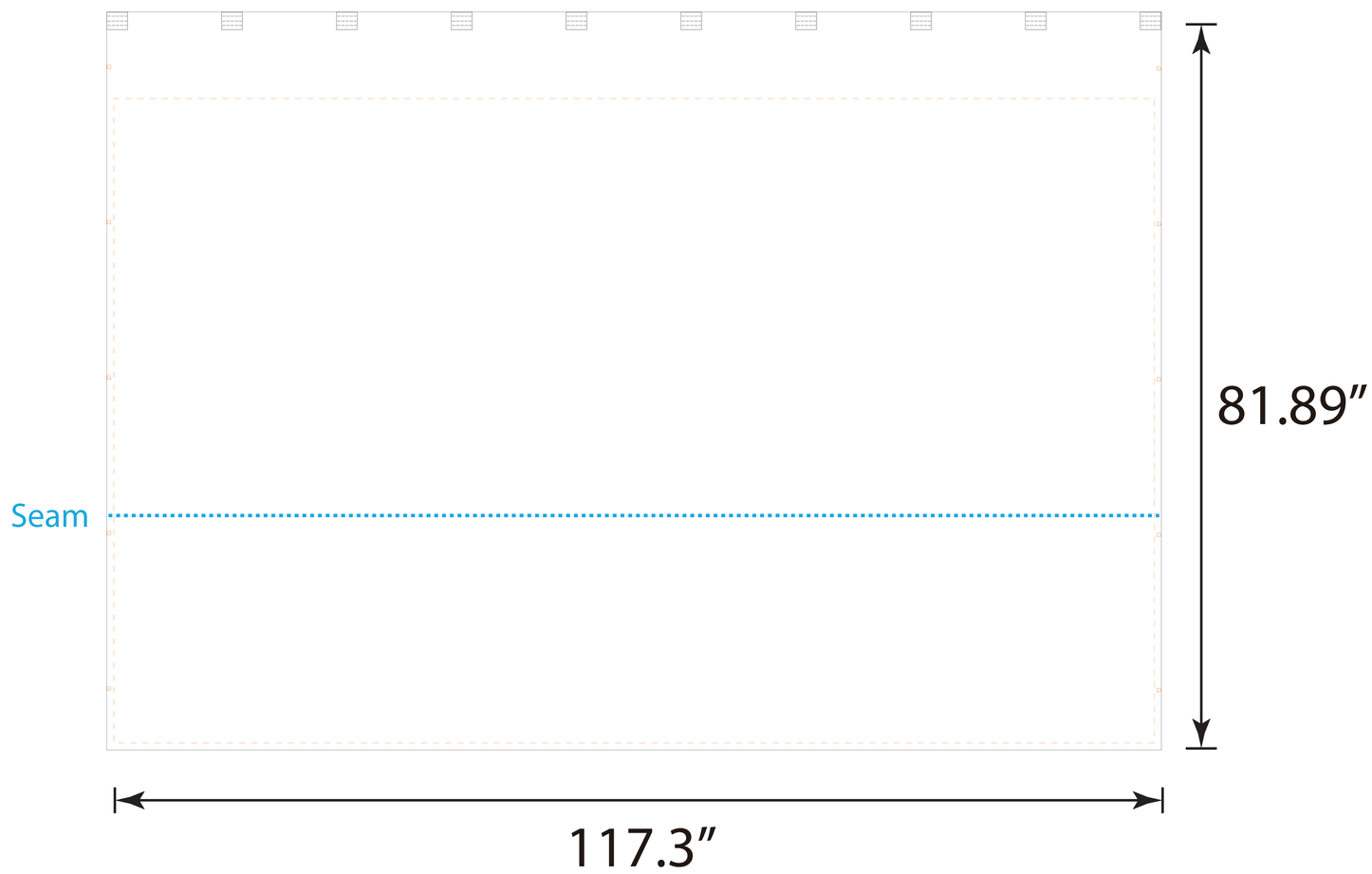
Full back wall