OUTLET TAGS CANOPIES
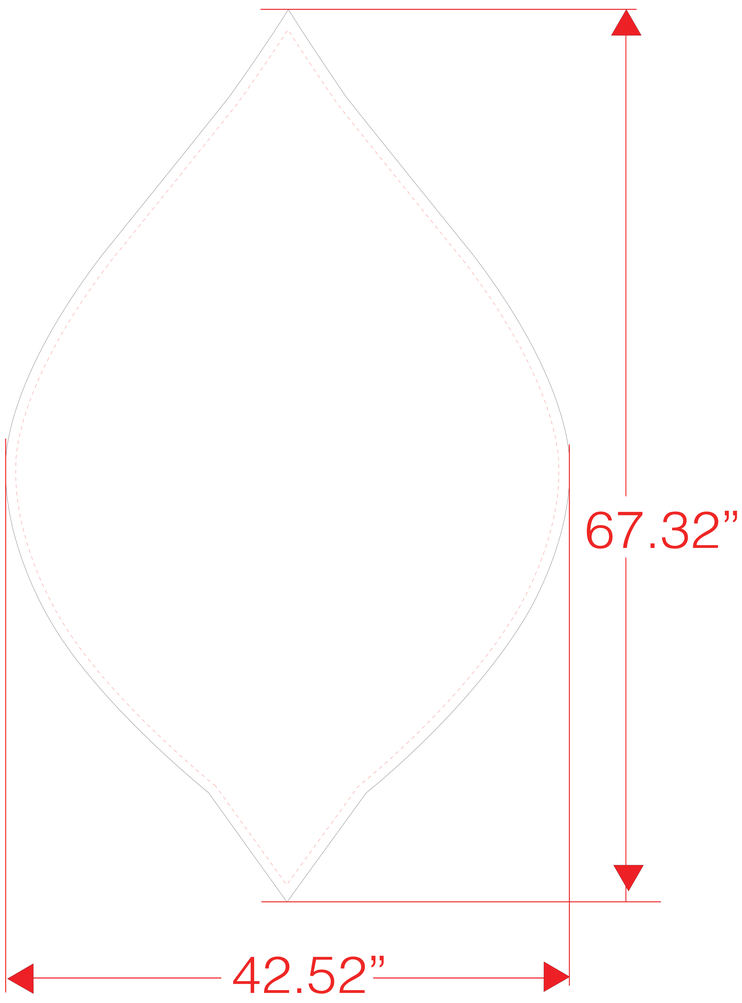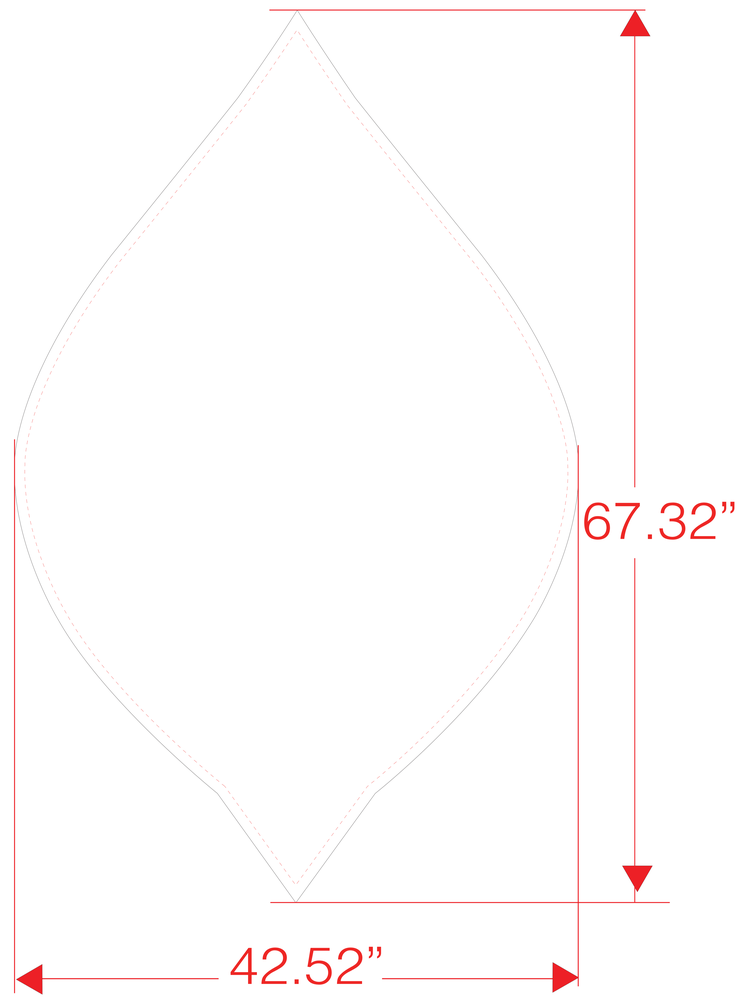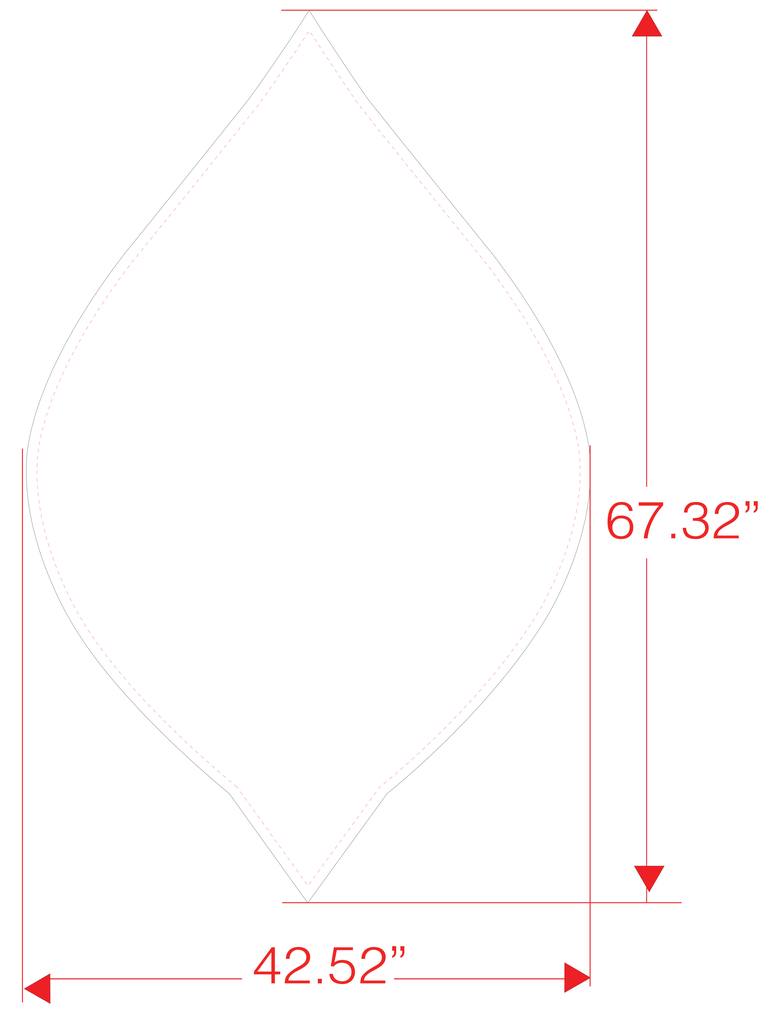
67.32”X42.52”X3PCS